Mockup Presentation

Silver A

October 16, 2008

Unlimited Range

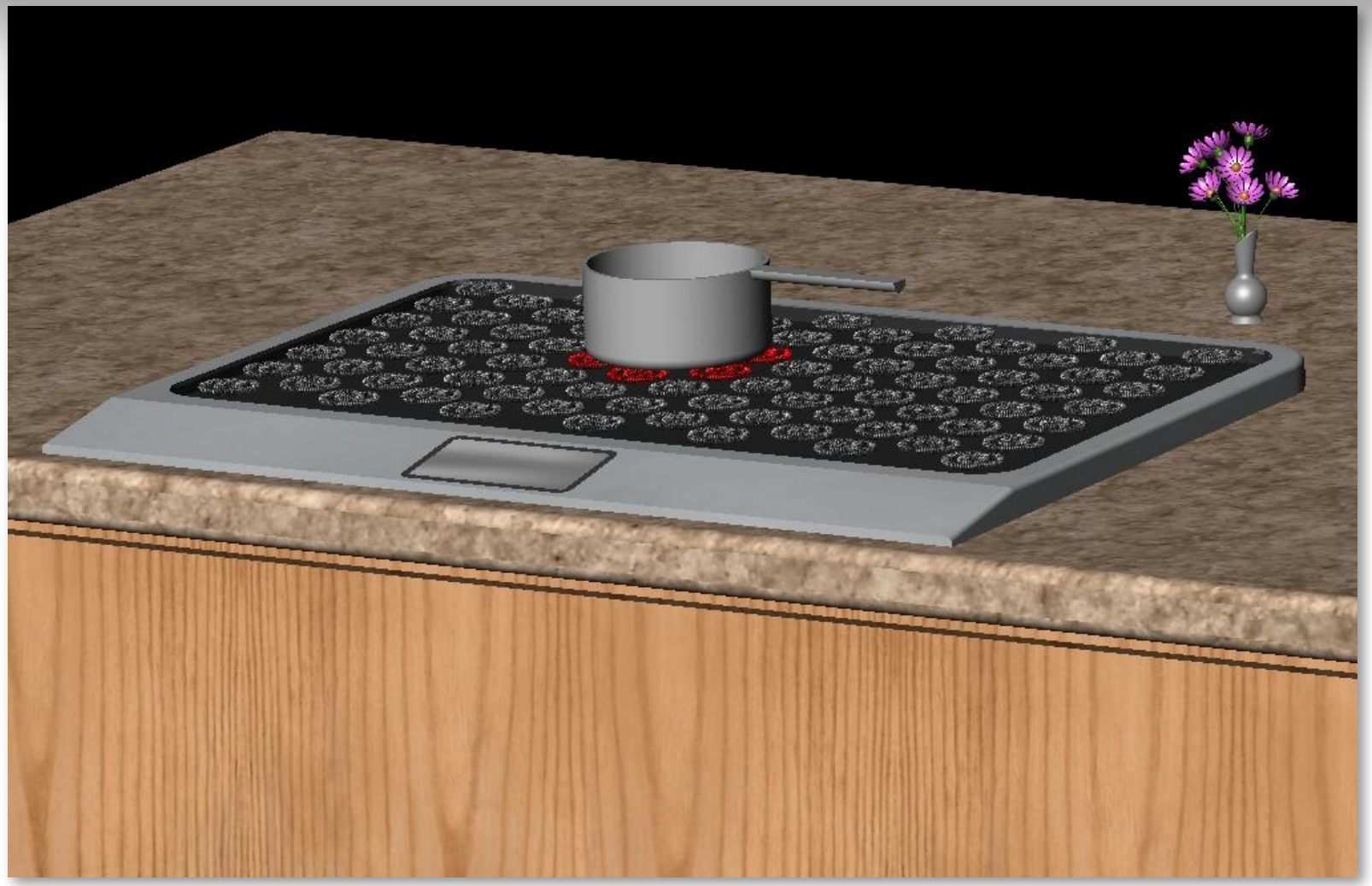

Unlimited Range

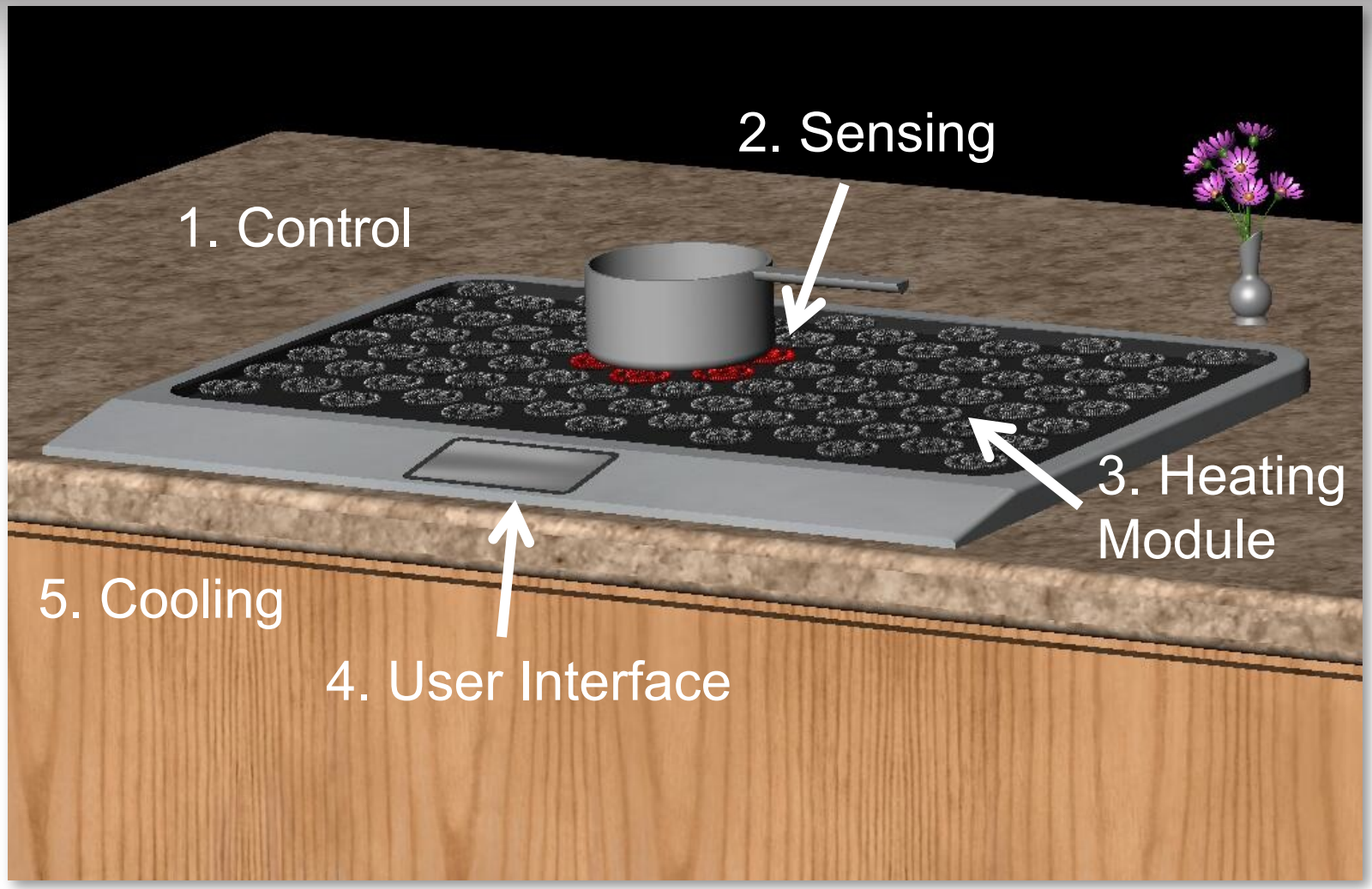

Unlimited Range

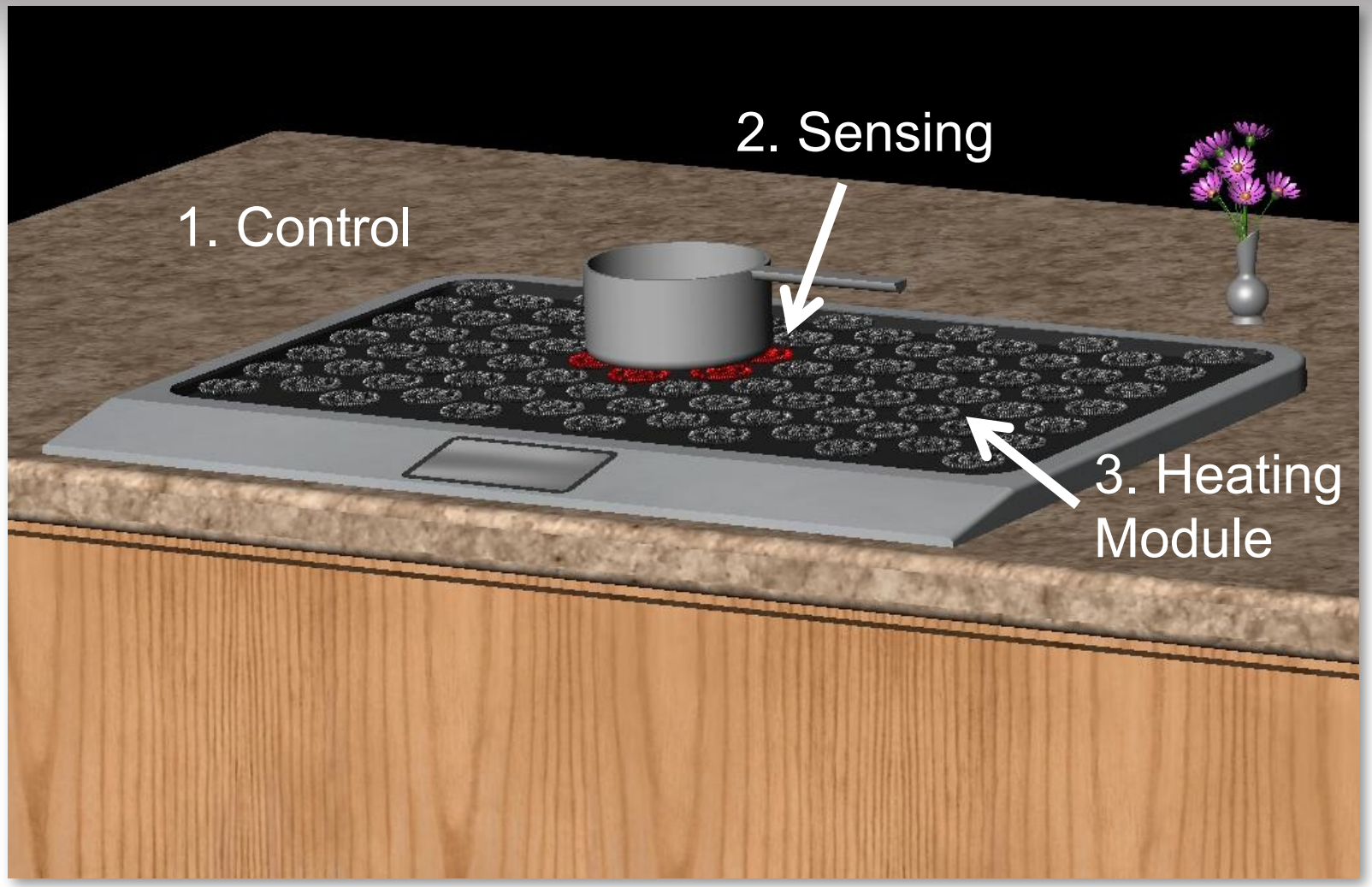

Refining Customer Needs

Before:

- Customer Needs Assessment: 130 Surveys
- One-on-One Interviews with Chef, Retailer from Yale Electric
- Benchmarking against 15 high-end stovetops

Product Contract

Risk	Customer Needs
#1	Temperature Control
#2,3	Variable Burner Size/Position
#4	Safe Operation
#4	Easy to Use
	Easy to Clean

Manufacturing Cost = $250
Retail Price = $1000

Risk #1: Control

Design Attributes
Control of Discrete Elements Range of Power

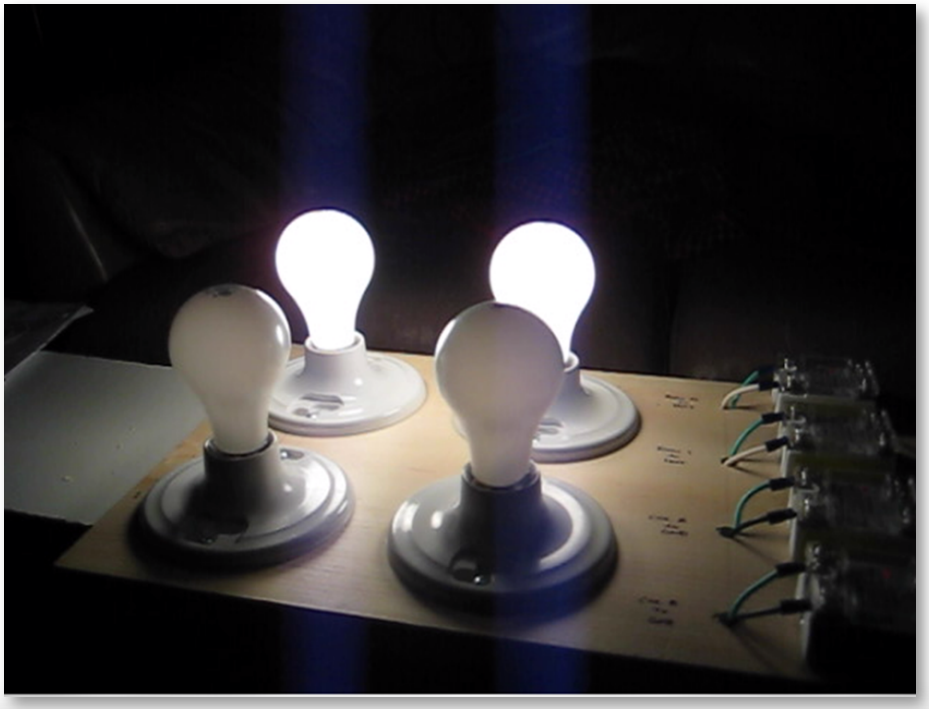

Risk #2: Sensing

Design Attributes
Pot Locating Ability

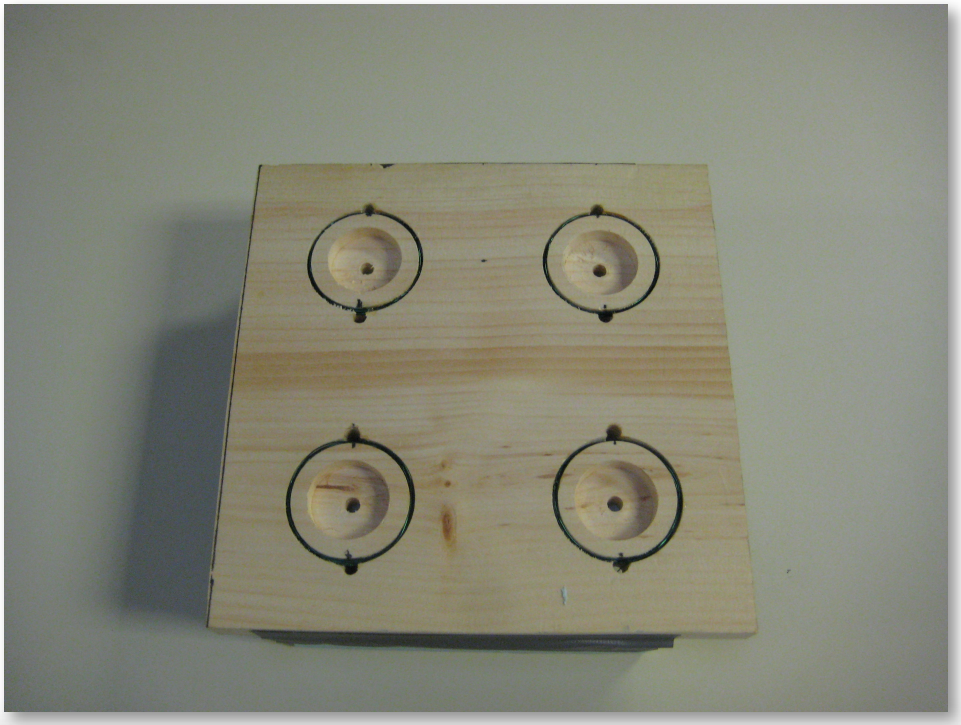

Risk #3: Heating Module

Design Attributes
Resolution

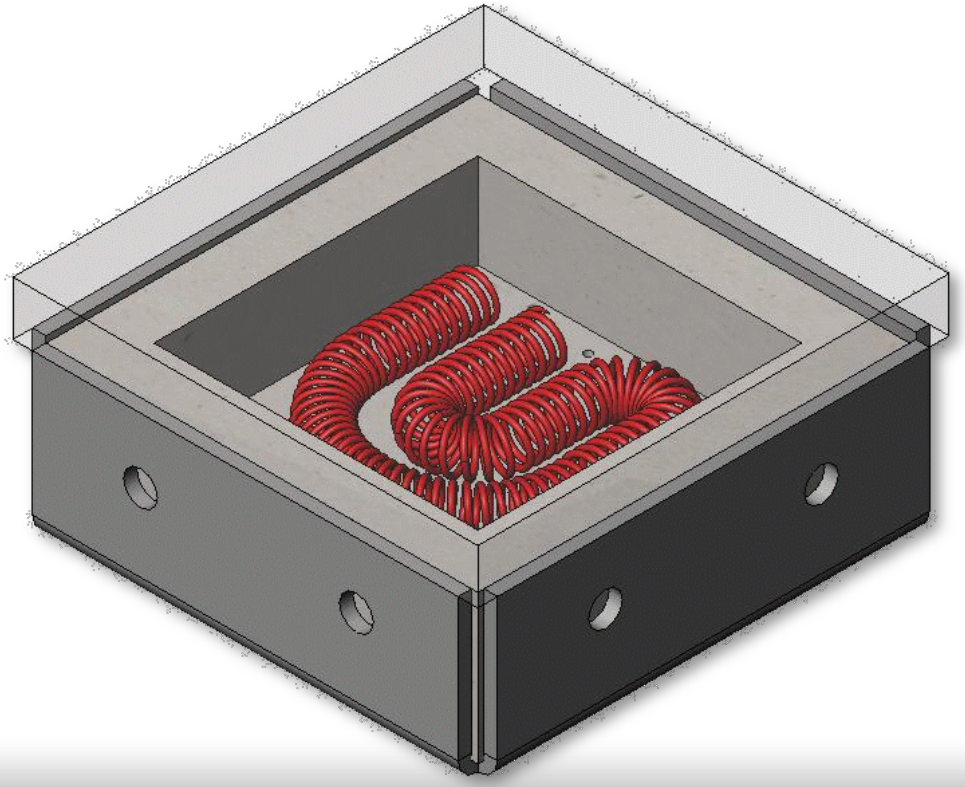

Unlimited Range

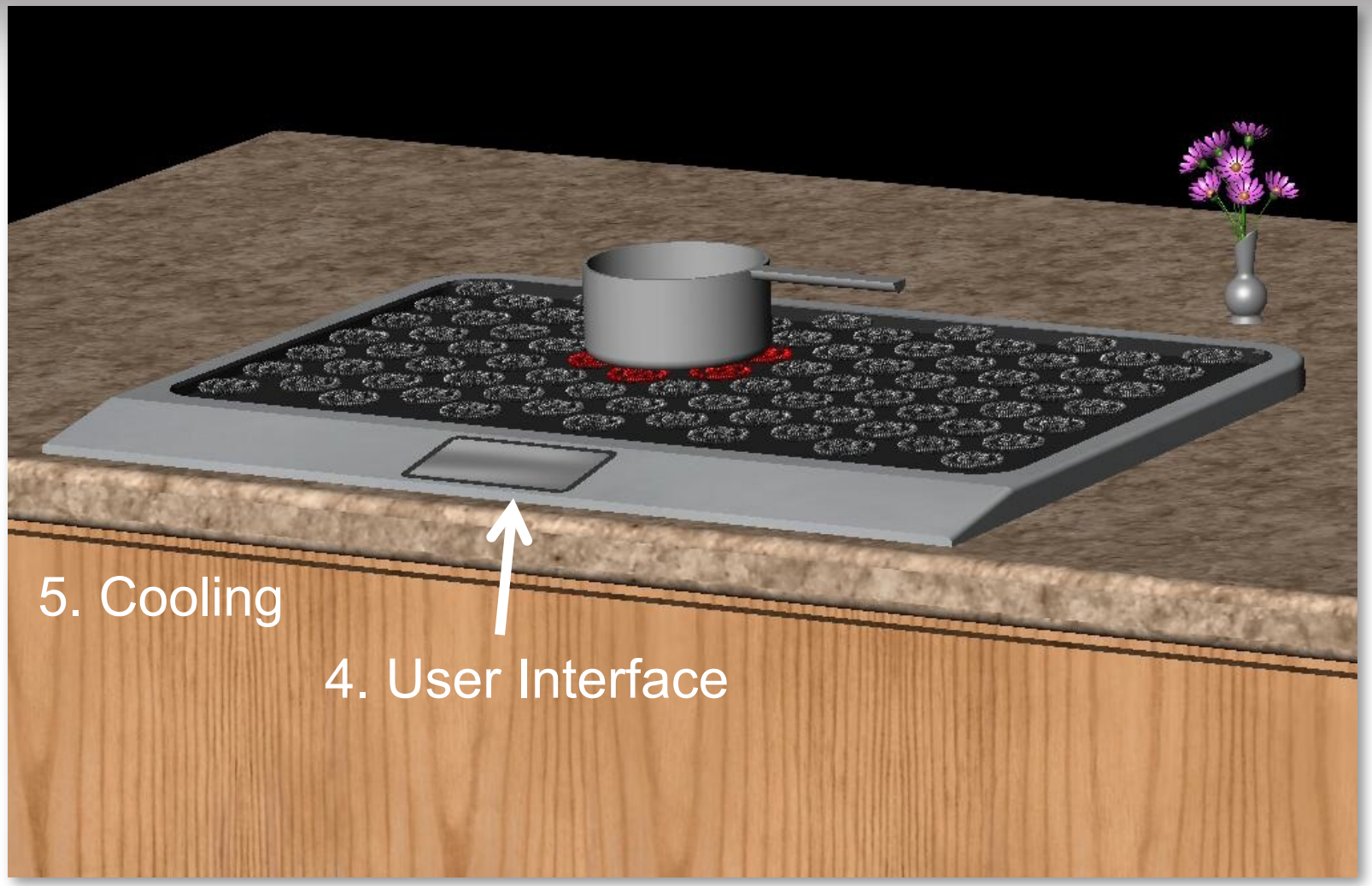

Handouts

Unlimited Range: *Risks*

Primary Risks Identified

1. Sensing the position and shape of a pot or pan.
2. Controlling an array of heating elements.
3. Constructing an insulated, modular heating element.
4. Creating an understandable graphical user interface.
5. Cooling heating elements once the range is powered off.

Focus

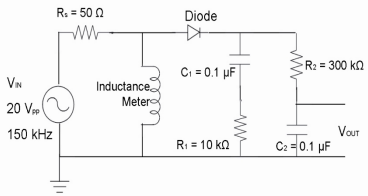

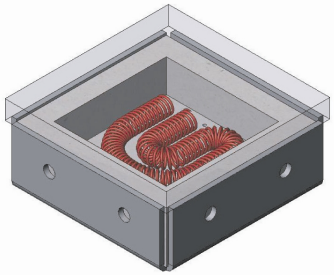

1. Sensing Pot Size & Position

A) Inductance Sensor: Induce eddy currents in metal pot.

Results:
Senses any metal resting on stovesurface.

B) Optical Sensor: Identify pot edges from photograph.

Results:
Identified pots on a stove surface. Lens must be clean. Noisy data.

2. Powering a Heating Array

A) Lightbulb Array: 4 bulbs controlled by four relays.

Results:
Bulbs can be powered on in any pattern.

B) ORC Board: Relays driven off of one ORC Board.

Results:
Power to bulbs can be regulated using Pulse Width Modulation

3. Heating Element Module

A) Resistance Coils: Compact heating elements.

Results:
Nichrome wire provides thermoelectric properties desired.

B) Insulation: Compact high performance coil insulation.

Results:
Fiberfrax Ceramic Fiber Paper provides properties desired.

Inductor Circuit

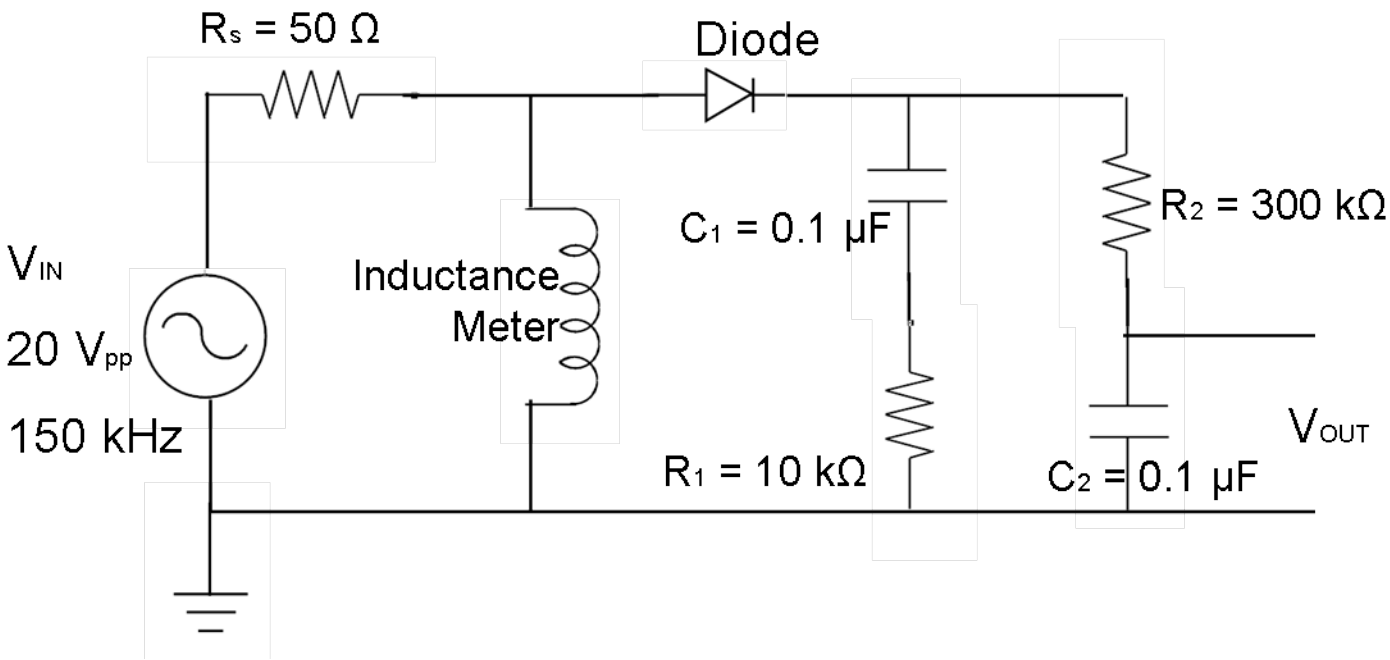

Circuit Design Diagram

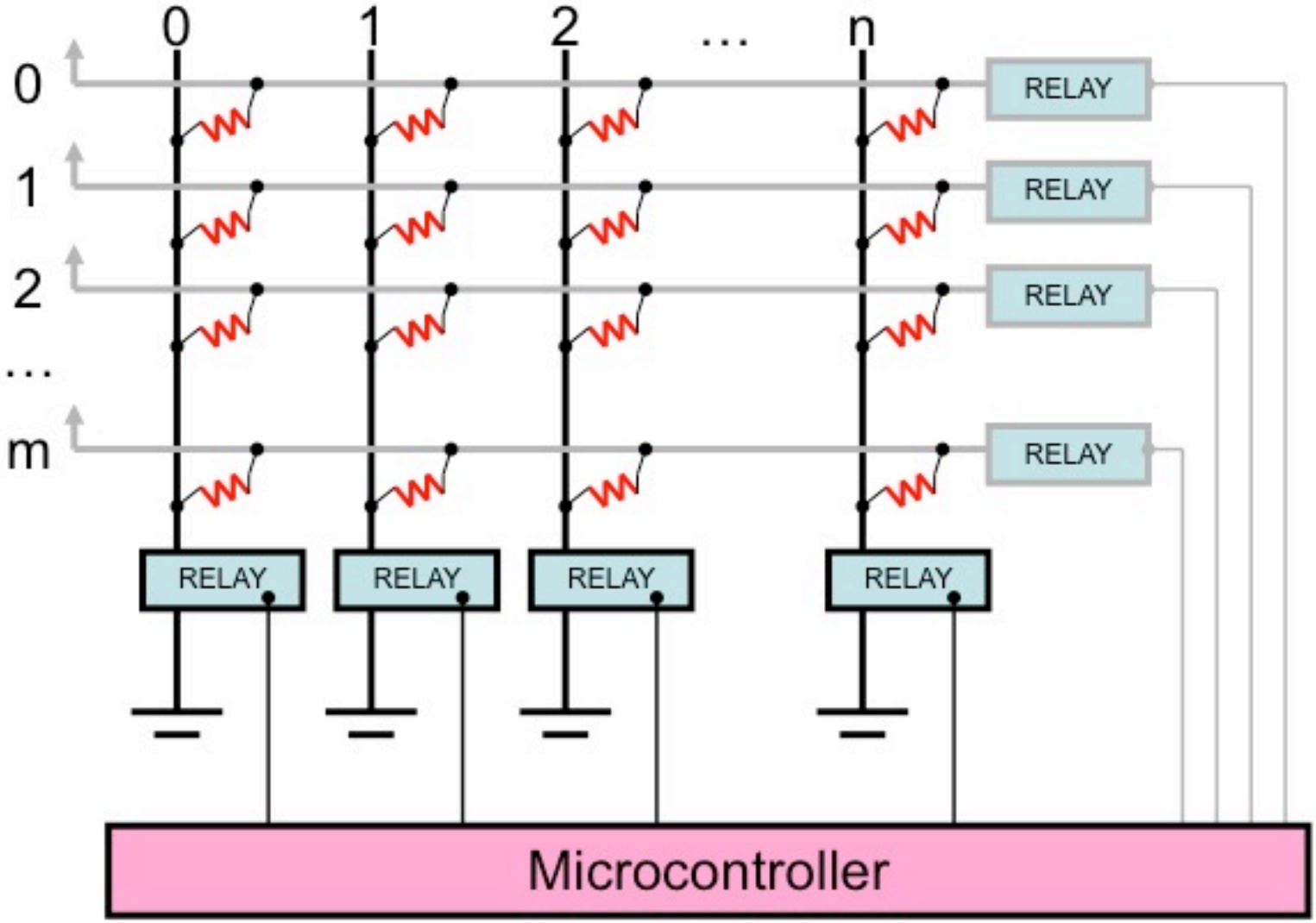

Product Contract

Customer Needs	Design Attributes
Temperature Control	Control of Discrete Elements Range of Power
Variable Burner Size/Position	Pot Locating Ability Resolution
Safe Operation	User Involvement
Easy to Use	Number of Steps
Easy to Clean	Surface Material Surface Quality

Cost Break-Down

Control (+ Interface) = $170

Heating Modules (+ Glass Top) = $65

Sensing = $15

Total Manufacturing Cost = $250

(Competition = $375)

Retail Price (add in 75% Markup) = $1000

(Competition = $1500)

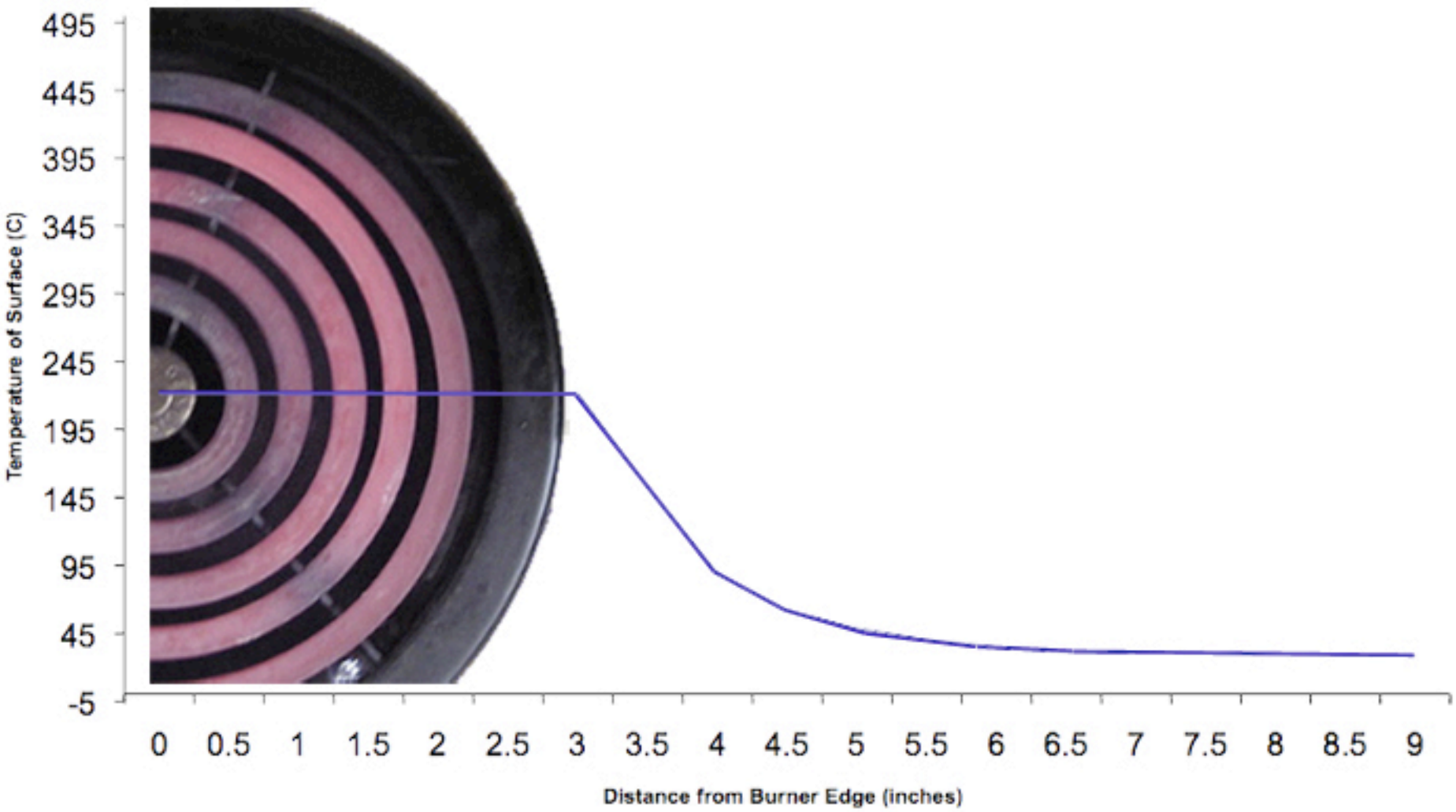
495
445
395
345
295
245
195
145
95
45
-5
Temperature of Surface (C)
0
0.5
1
1.5
2
2.5
3
3.5
4
4.5
5
5.5
6
6.5
7
7.5
8
8.5
9
Distance from Burner Edge (inches)

Silver A