# Walker Prime

walkerPRIME

Green Team

# Imagine …

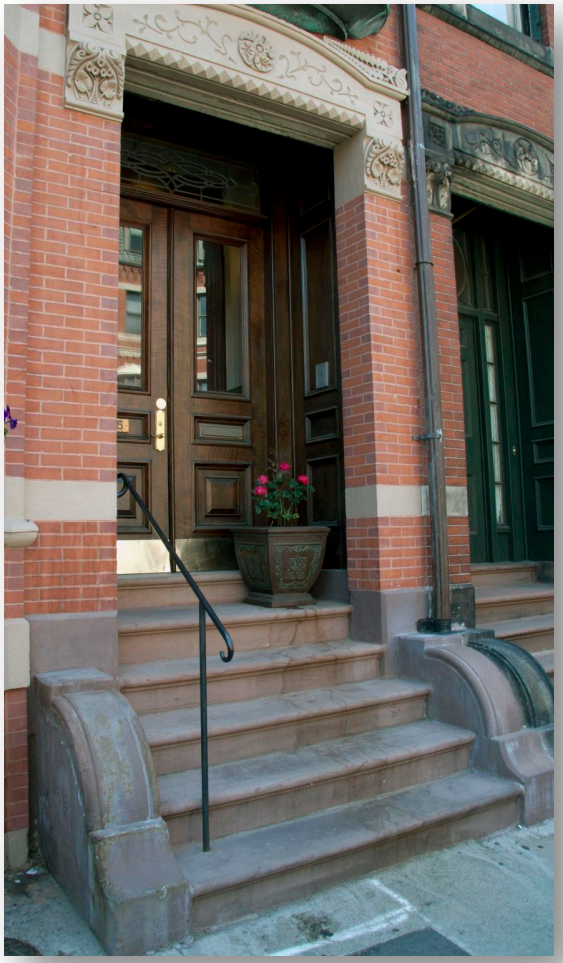

Steps

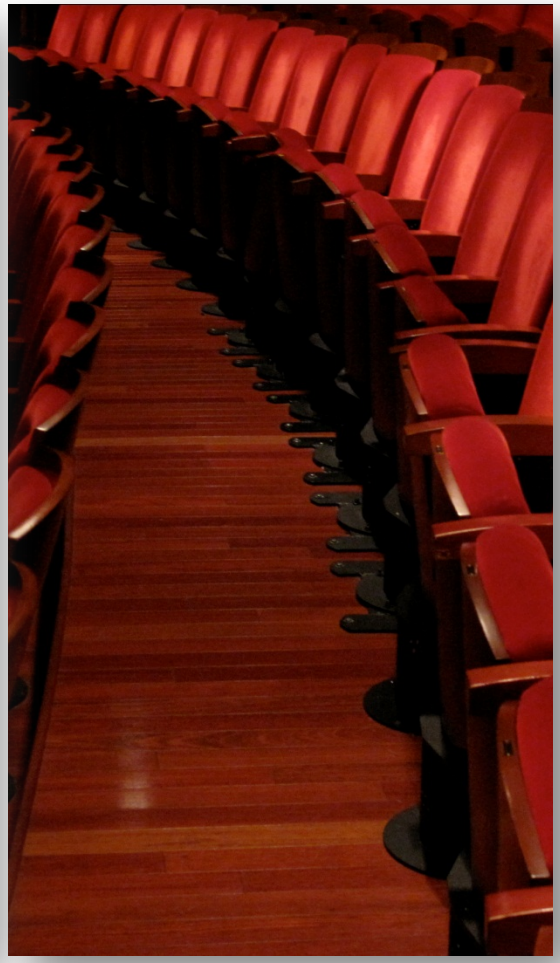

Narrow Aisles

Tight Quarters

# Walker Prime

walkerPRIME

Green Team

# Walker Prime

walkerPRIME

Green Team

# Walker Prime

walkerPRIME

Green Team

# User Profile | User Viewpoint

walkerPRIME

# User Experience | Demonstration

walkerPRIME

## Cane to Walker

Release
upper safety lock
↓
Pull
handles
apart
↓

## Walker to Cane

Release
lower safety locks
↓
Push
sides
together
↓

Device passively locks in position

# User Experience | Actuation

walkerPRIME

# Design | Architecture

**Stable** **Simple** **Ergonomic**

# Design | Walker Architecture

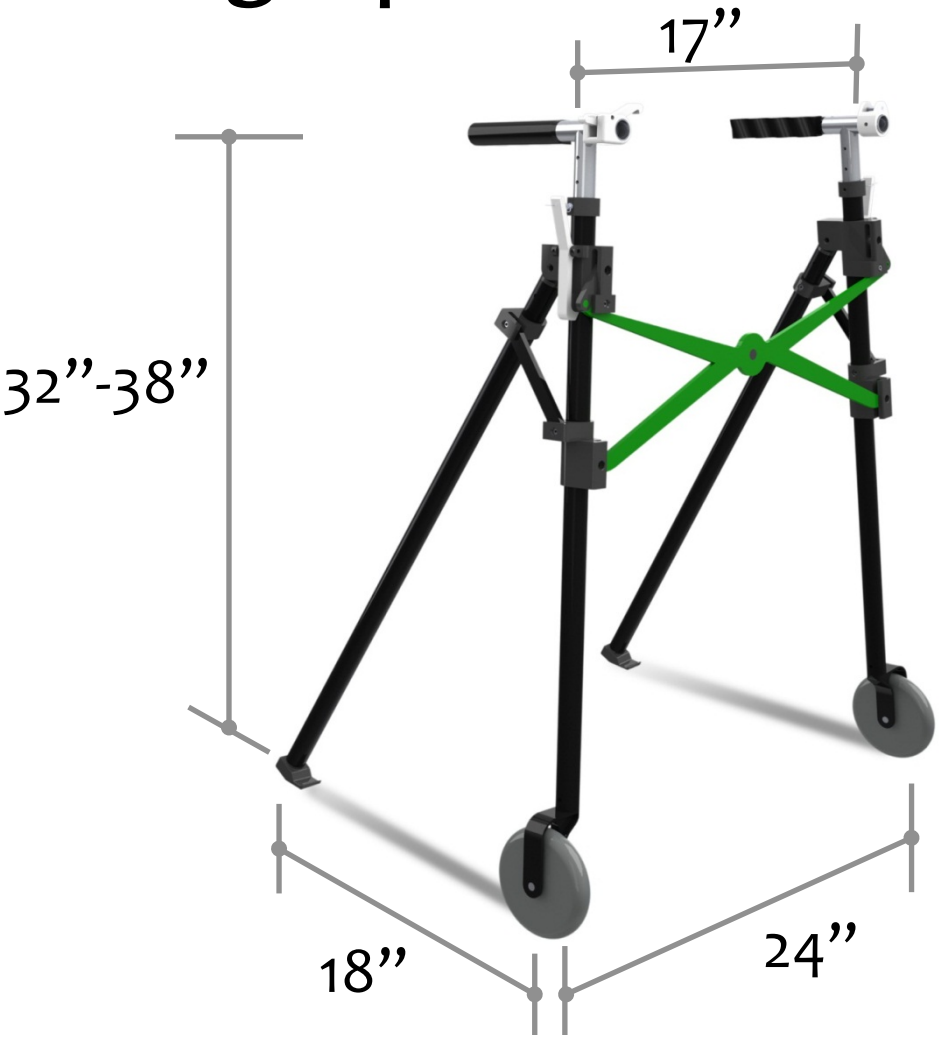


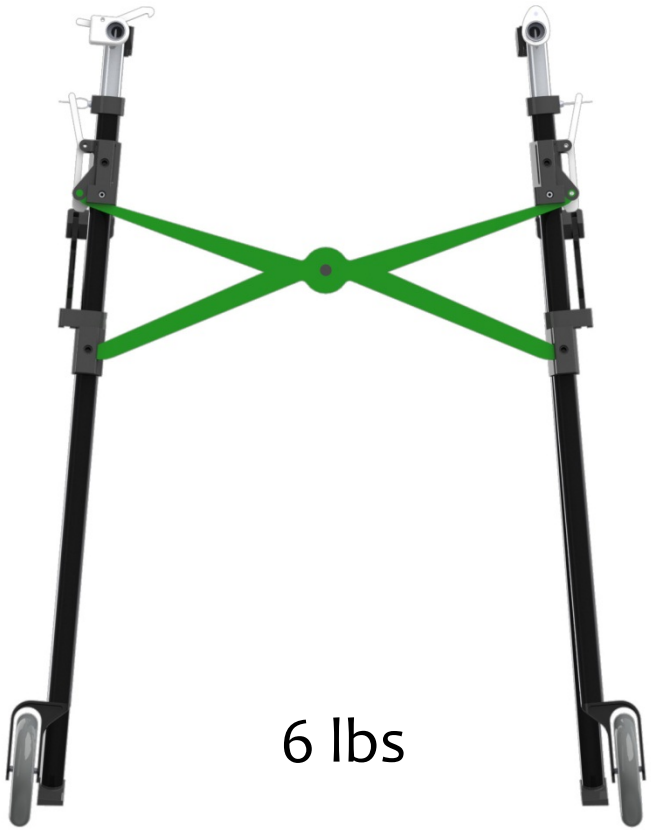


- Dimensions
- Height adjustment
- **Stability**

# Design | Cane Architecture

**Challenges**

- Maintain same handle height
- Small cane footprint

**Solution**

- Folding geometry
- Keeping wheels right above skids

# Design | Walker to Cane Actuation

**Challenge**

- **Simple,** intuitive user experience

**Solution**

- Linked motion in both directions

# Design | Handles

**Challenge**

To function comfortably in both modes

**Solution**

- **2** → **1**
- Wave guides handles together and forms contour for fingers

# Design | Safety Locks

walkerPRIME

**Challenges**

- Easy to reach
- **Easy to use**

**Solution**

- **Simple** passive locking
- In reach of hands
- Visual Cue

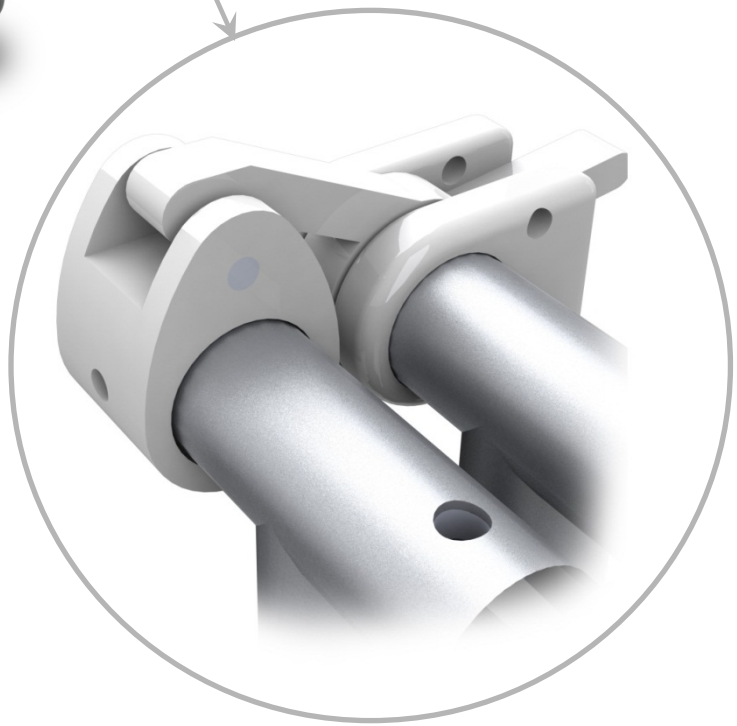

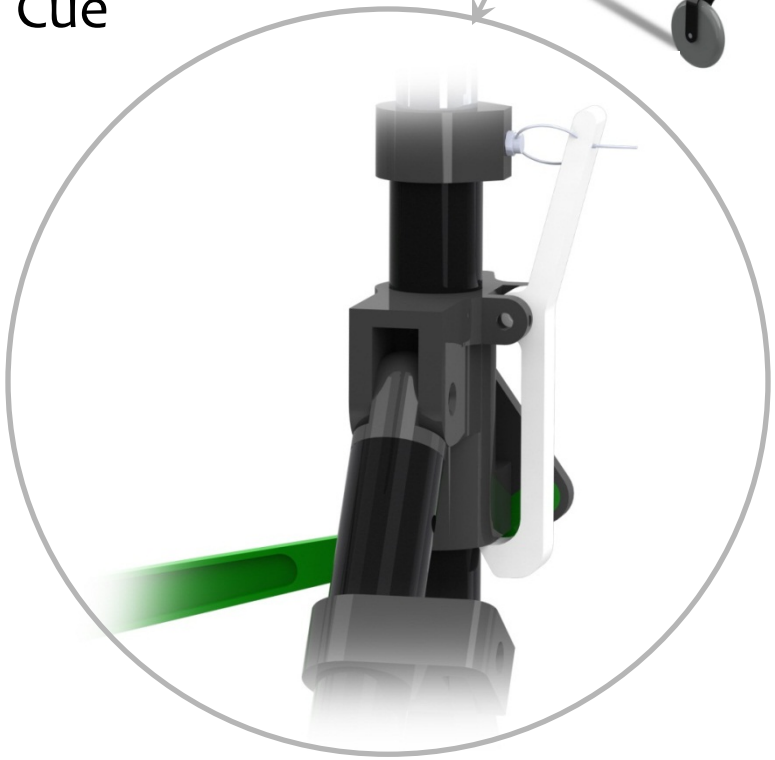

# Design | Lock for Cane Mode

**Challenges**

- Easy to reach
- **Easy to use**

**Solution**

- **Simple** passive locking
- In reach of hands
- Visual Cue

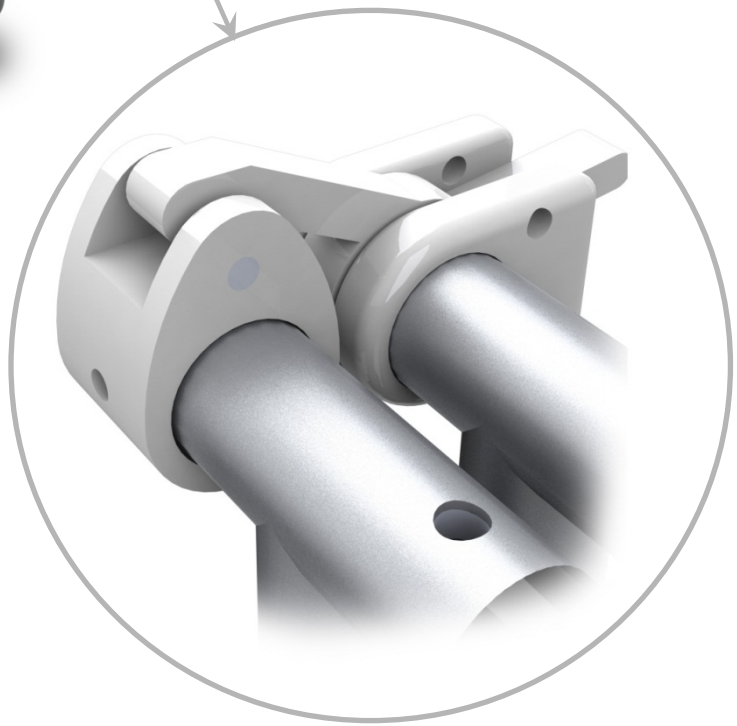

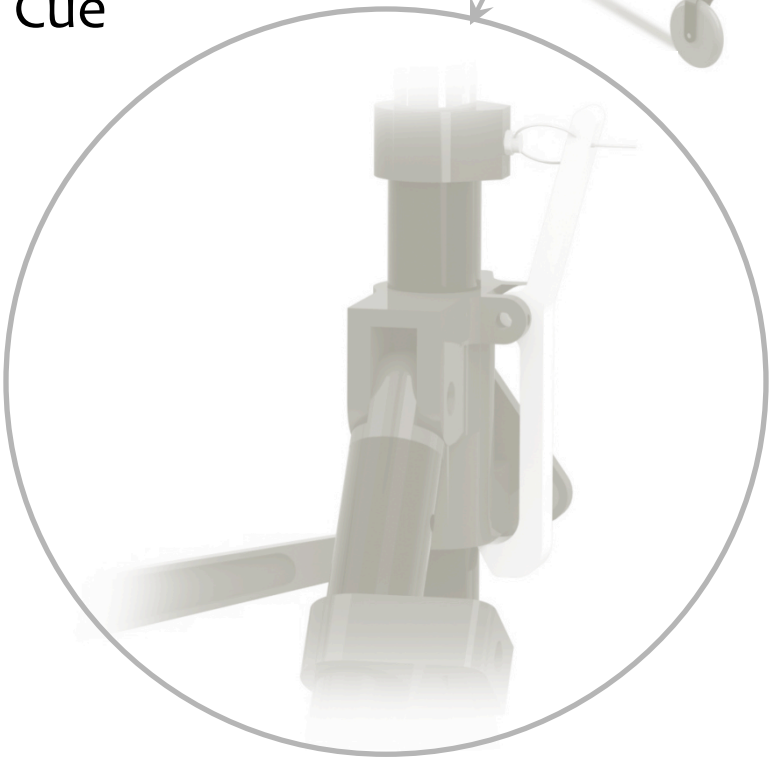

# Design | Lock for Walker Mode

**Challenges**

- Easy to reach
- **Easy to use**

**Solution**

- **Simple** passive locking
- In reach of hands
- Visual Cue

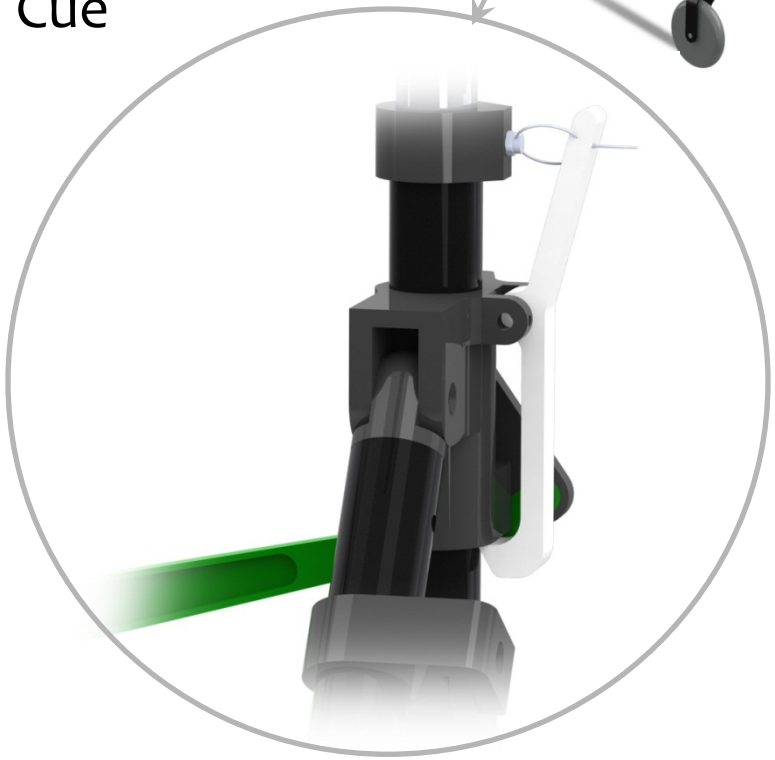

# Design | Wheels

**Challenge**

- **Stability** for indoor/outdoor use
- Clear ground in cane mode

**Solution**

- 5” wheels for indoor/outdoor use
- Lift wheels above skids

# Design | Skids

**Challenge**

Use in walker and cane mode

**Solution**

- Dual-purpose skids for **stability**
- Low friction for sliding in walker mode
- High friction for functionality in cane mode

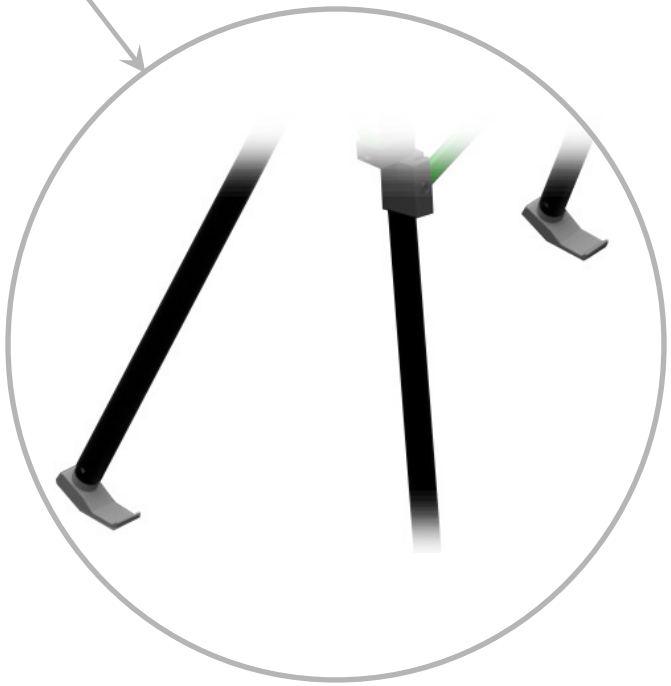

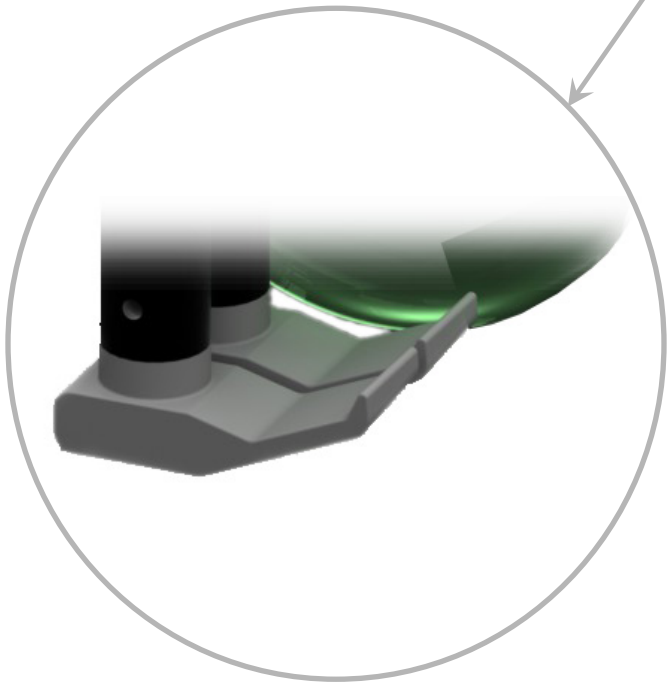

# Business Plan | Market

walkerPRIME

## Annual market size

**500K+** walkers sold/year

## Annual market growth

**3.1%**

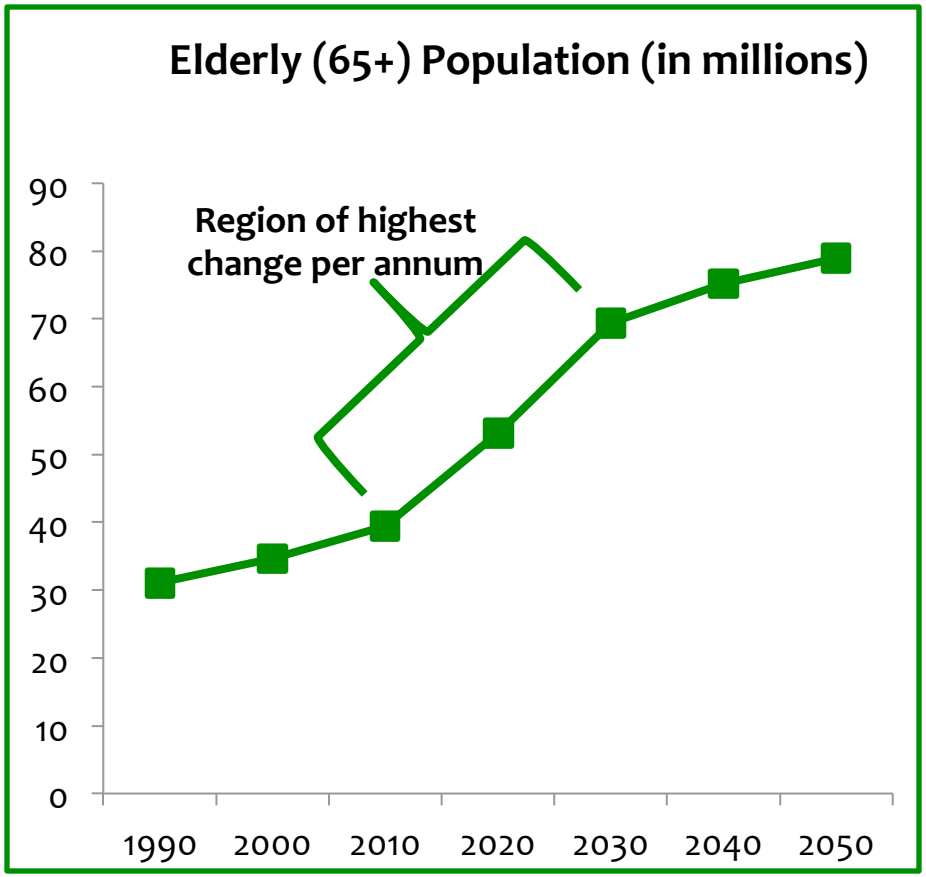

# Business Plan | Competition

$400

Volaris S7 Walker

$120

Metrowalker

$80

Standard 2 Wheel Folding Walker

**$200**

Walker Prime

# Business Plan | Costs

## Production Costs

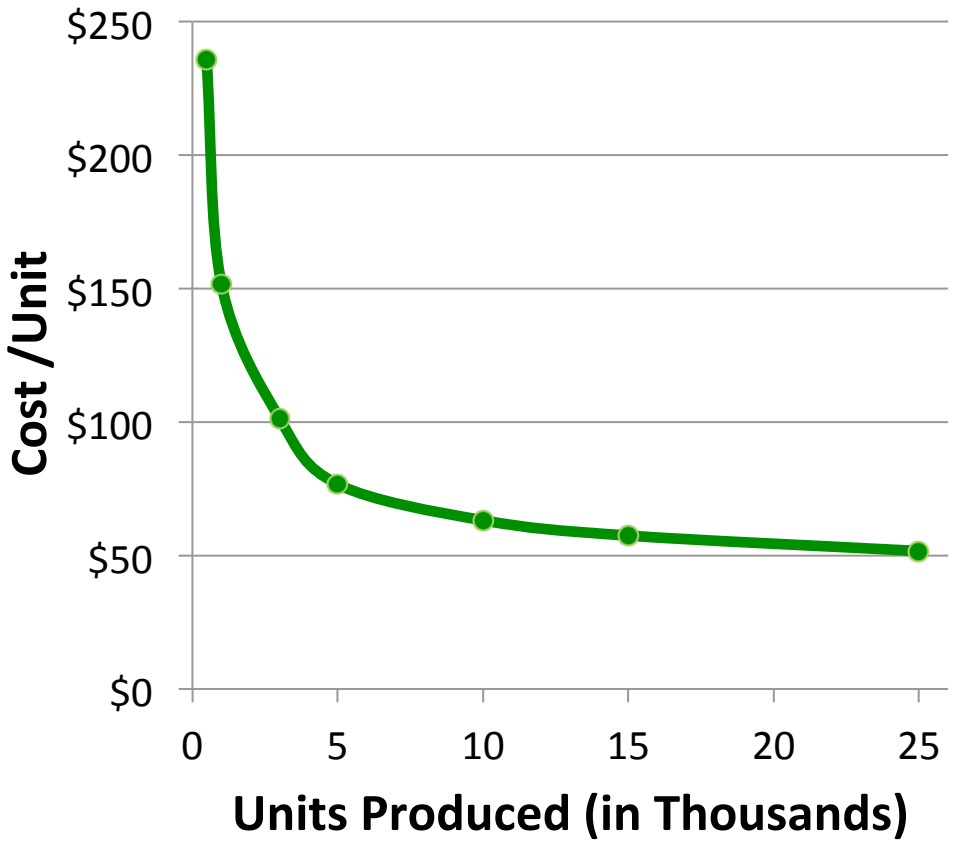


## Additional Costs

Research and Development

Sales, General, Administrative

Distribution

# Business Plan | 5-yr Projections

walkerPRIME

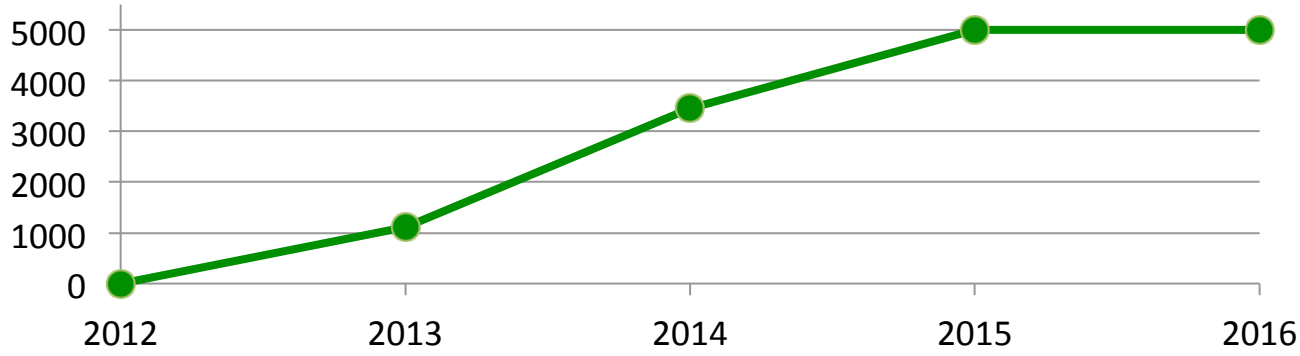


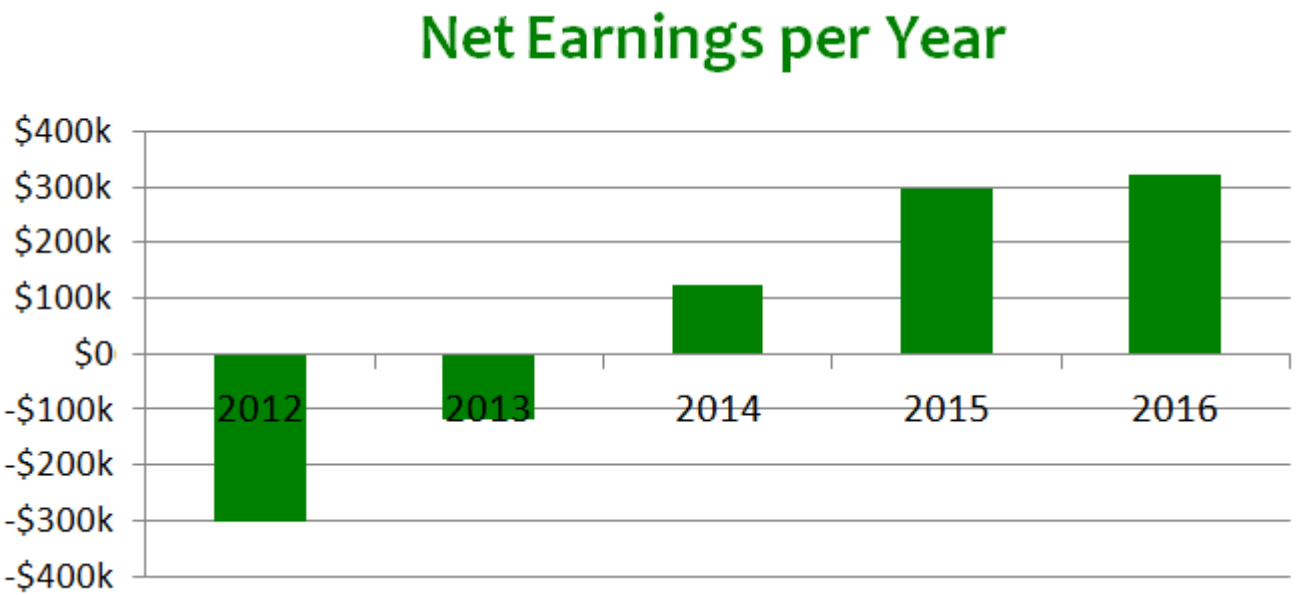


**Initial Investment**
**$300,000**

**Positive Cash-flow:**
**Year 3**

**IRR**
**21%**

# Walker Prime

The All Access Walker

## 2.009 Green Team

Jonn-Ross Andrews
Ragheb El Khaja
Rand Hidayah
Annie Huang
Kristin Kagetsu
Dan Kelly
Jessy Mwarage
Mike Nawrot
Elaina Present
Brendan Rios
Michael Rodrigo
Li Wu

walkerPRIME


## With Thanks To

**Industry Contacts**

Jamie Dame and Sherrill House Staff
Youville Assisted Living
Mt. Auburn Rehabilitation Services
Carleton-Willard Village
Hale House
Brookline Health Center
Agelab
River Street Metal Finishing, Inc.-Glen

**Pappallardo Lab Staff**

Dick Fenner
Bill Cormier
Joe Cronin
James Dudley
Steve Haberek

**2.009 Course Staff**

Prof. David Wallace
Matt Duplessie
Peter Nielsen
Jane Kokernak
TAs

**Mentors**

Matt Blunt
Matt Johnson
James Lee
Michael Miller
Ben Peters
Sean Schoenmakers
Gerald Trotman

walkerPRIME

# User Profile | Description

walkerPRIME

## Our user is …

Able to stand without support

Able to carry 6 lbs with one arm
(less than a gallon of milk)

Able to go into the community independently

# User Profile | Professional Viewpoint
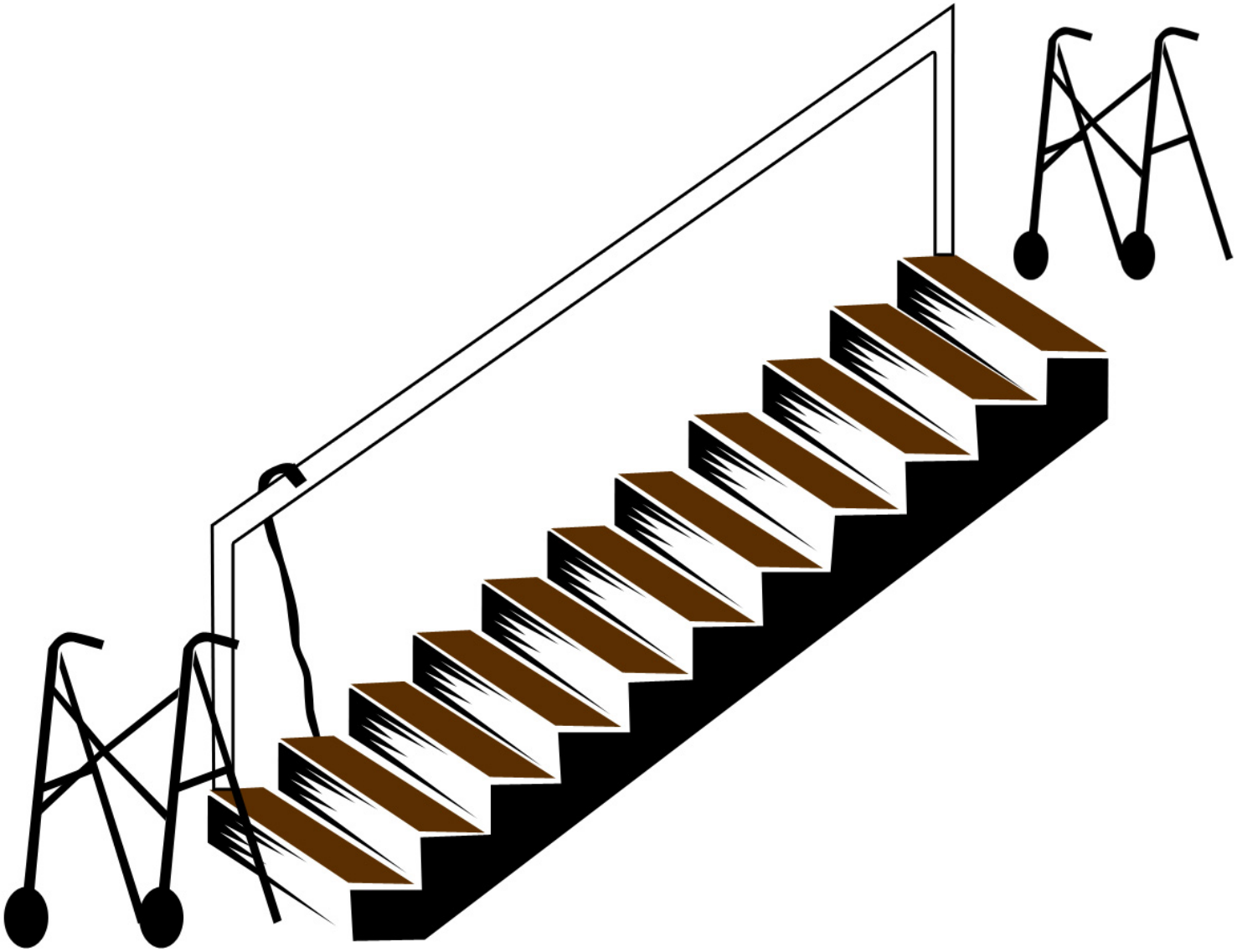
walkerPRIME