TranSit

Transforming Public Transportation

Silver A

Product Vision: Retracting Seat

Transform public transportation systems to accommodate peak and off-peak demand

Learning from the Sketch Model

Motion

Usable, Intuitive

Materials, Structural integrity, Space-saving capacity, Users

Space-saving, Intuitive, Adaptable Seat

Critical Risks:
Adapting to Commuters' Needs

Materials—structural integrity

Spec to 300lbs on seat edge

Usability—force required

10lbs upward force to retract seat

Height—window coverage

48 inches

Safety—pinch-points

eliminate

Key TranSit Specifications

Customer Need	Attribute	Specification
Easy, fast deployment	Deployment time	Less than 4 seconds
Saves space when retracted	Percentage of footprint saved when retracted	>85%
Standard seat size and weight capacity	Same size, weight specs as available seats	Yes

Key Findings—Customers

- Key Customer Needs
- 20-50% increase in T capacity/car
- No IP infringement

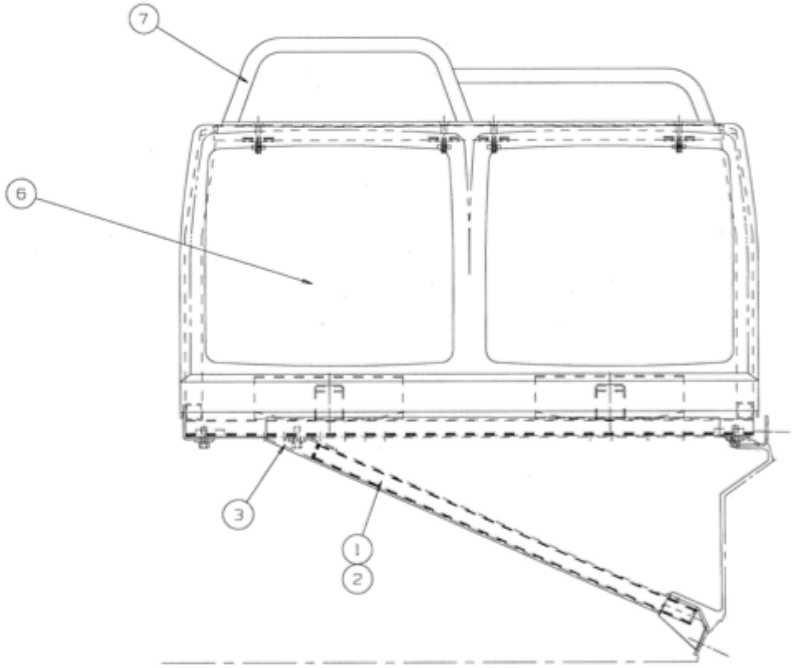

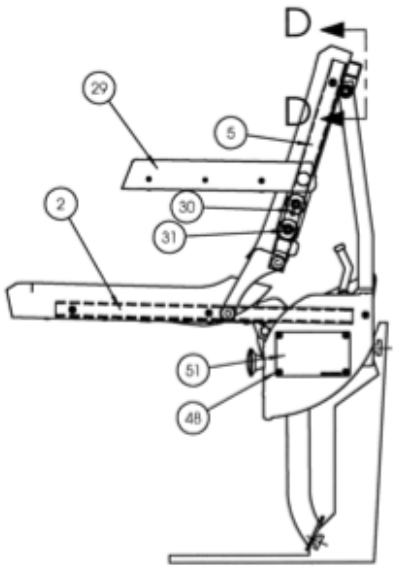

PARTS LIST

ITEM	PART NUMBER	DESCRIPTION		LH QTY
1		LOWER MOUNTING GROUP		
2	39-210106-L21L08N9B			1
3	39-210114-B801N0B	UPPER FRAME ASSEMBLY		1
4	39-210102-B801NNB	SHELL GROUP		1
5	39-210103-A801NN9B	BACK PANEL GROUP		1
6	SEE SEAT INDEX	INSERT GROUP		2
7	39-210104-01N	GRABRAIL GROUP		1
8				
9				

Remaining Concerns & Design Options

- Automatic stowing
  - Spring loaded
  - Motorized actuation
- Locking
- Installation
- Cost