smart spot

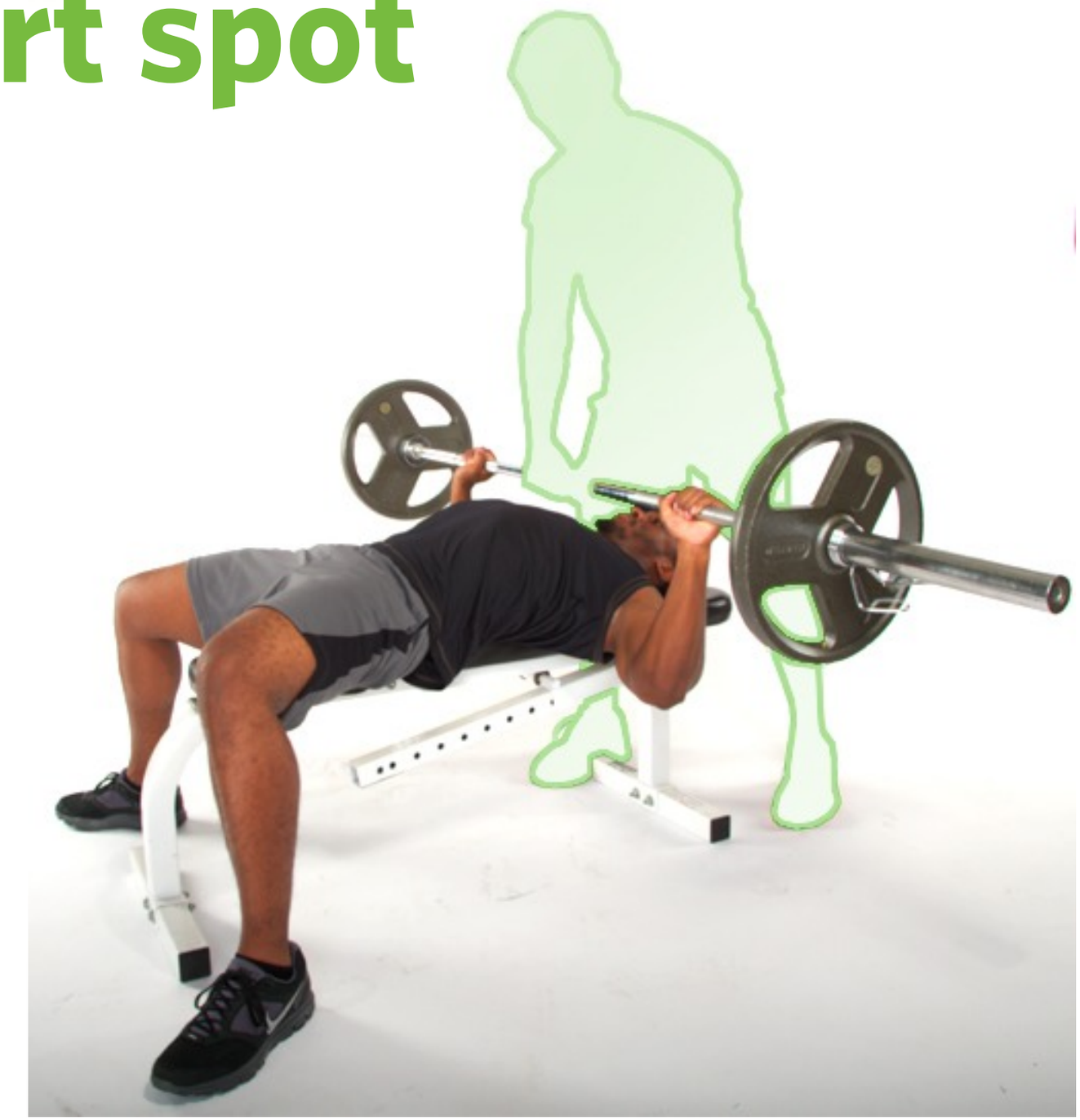

Source: stack.com

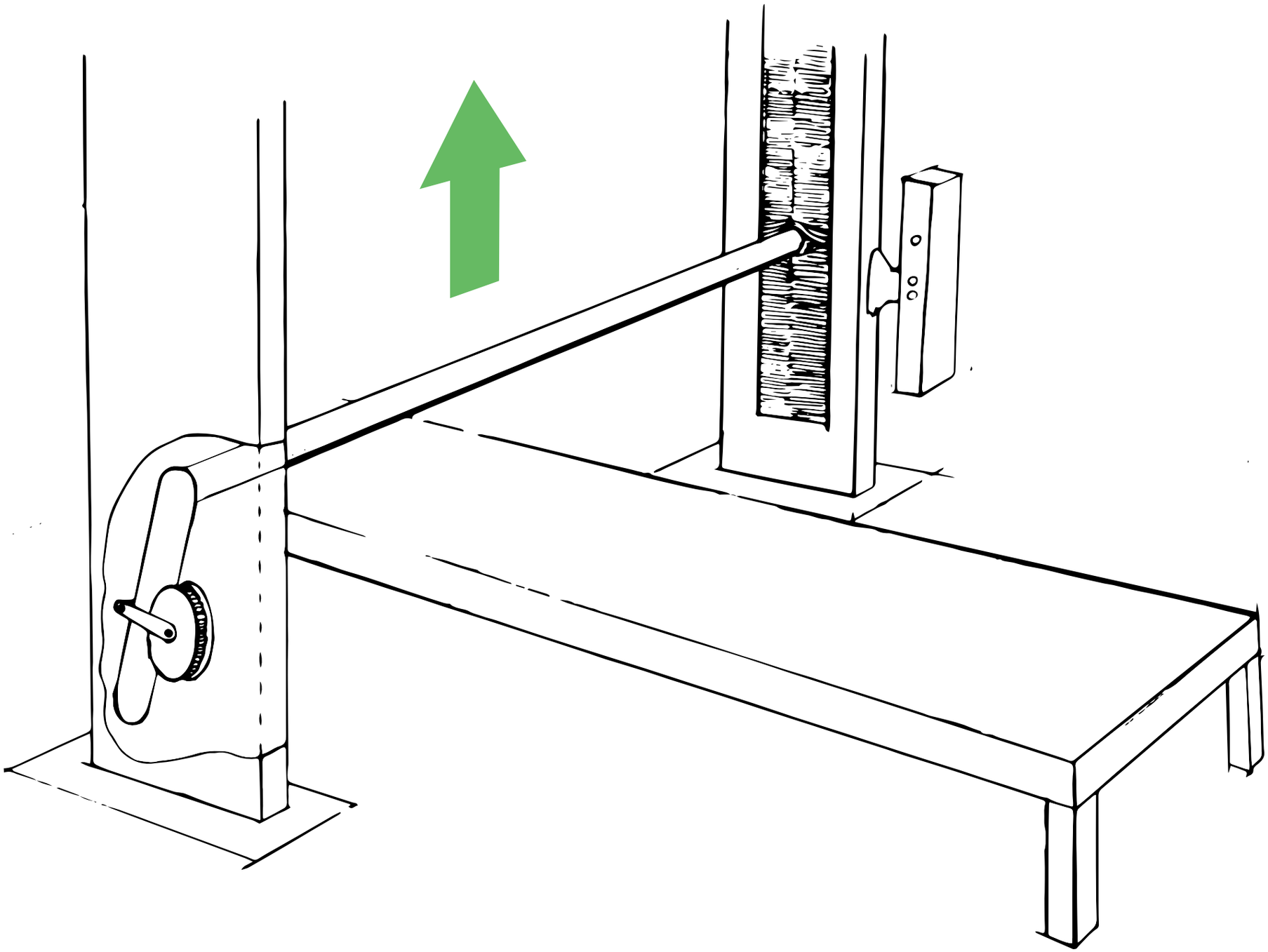

questions for sketch model

1. Mimic the feel of free weights?

2. Mimic realistic bar movements?

2 problems, 2 models each

Weight mechanism

- electric motor resistance
- pneumatic resistance

Bar flexibility

- flexible bar fittings
- flexible rack

motor vs. pneumatics

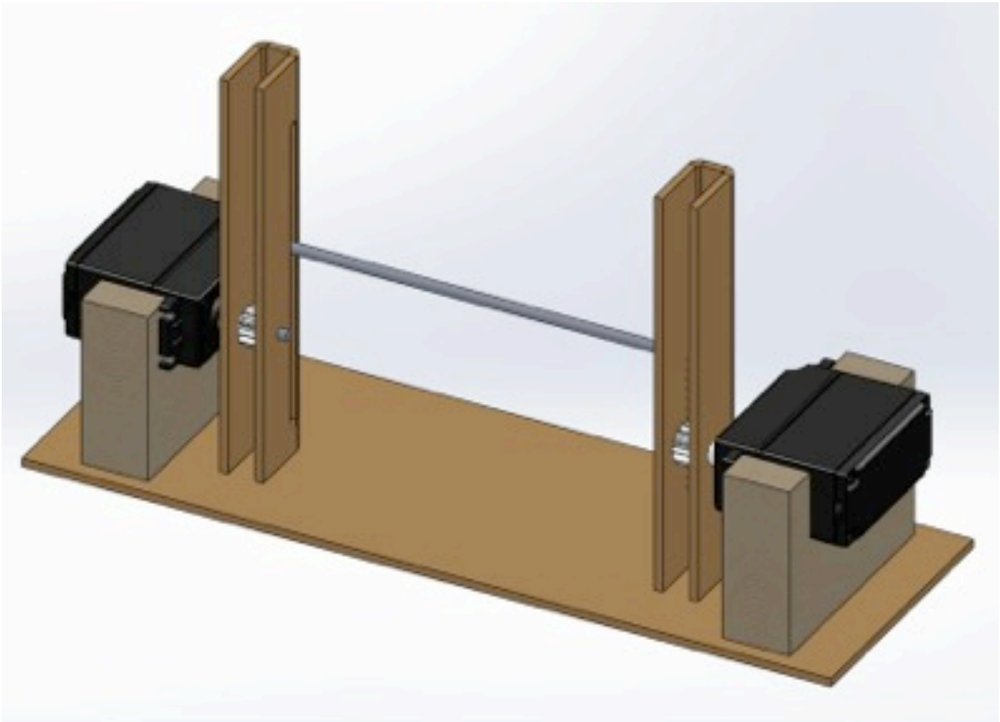

vs.

flexible bar vs. flexible rack

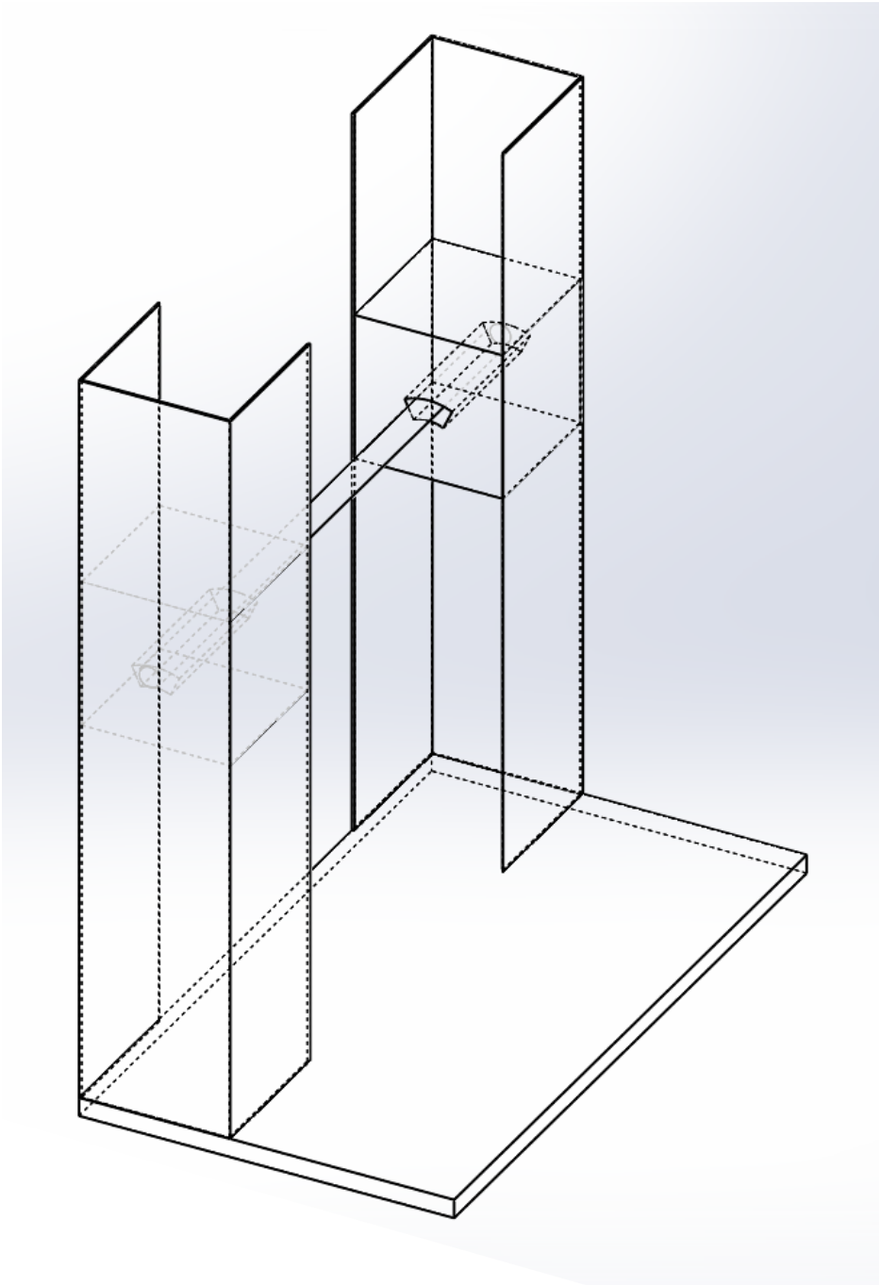

vs.

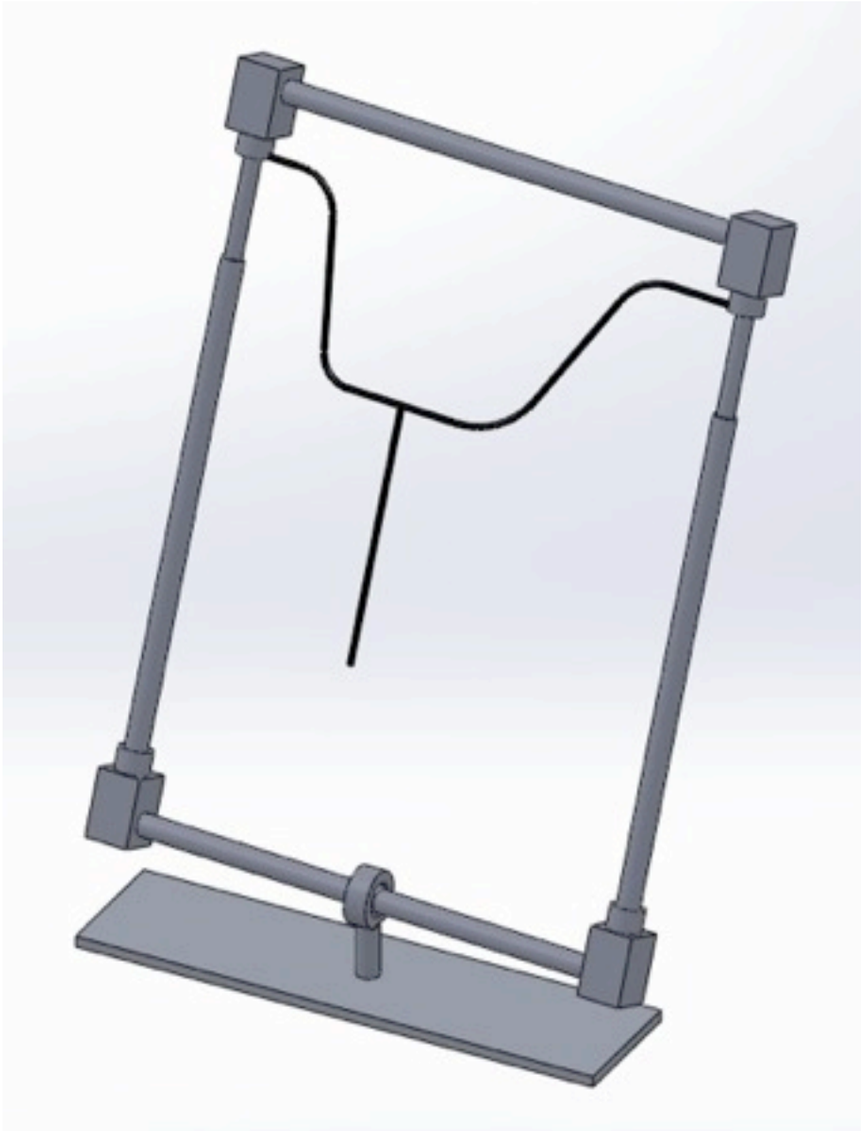

next steps

Eliminate jamming?

Improve speed?

Add sensors?

benchmarking

	Free weights	Normal machines	Robotic spotter	**Smart Spot**
Safety	0	+	+	**++**
Size	0	+	-	**+**
Workout quality	0	-	0	**+**
Home use	0	+	-	**+**

Source: Amazon, Bowflex, Excentrixx

market estimation

Fitness machine market: $3.9 B

20% - free weights
35% - weight machines

Our market: **$2.15 B**

Source: IBISWorld